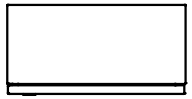

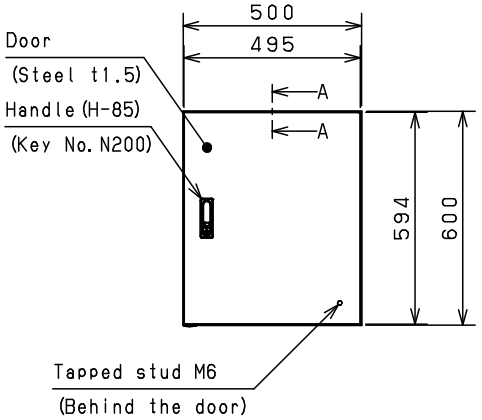


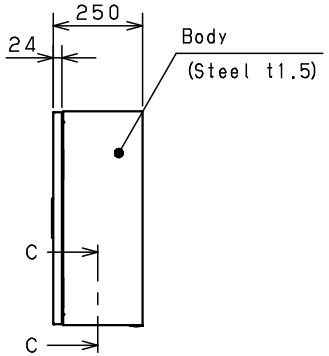


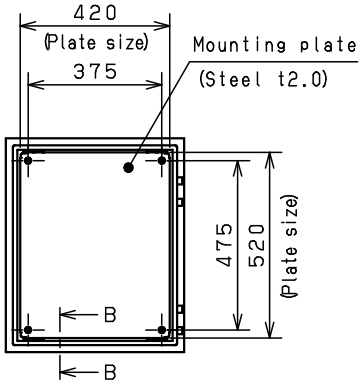


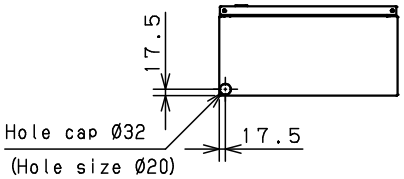


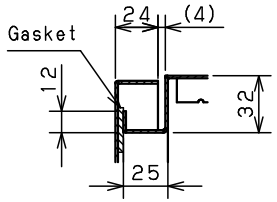


CROSS SECTION A-A
1 : 3

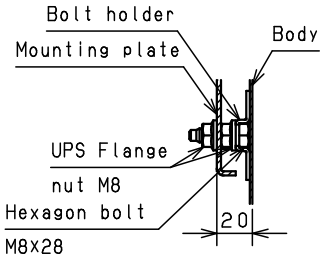


CROSS SECTION B-B
1 : 3

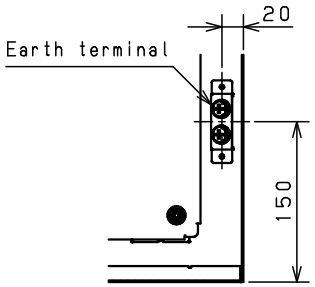


CROSS SECTION C-C
1 : 5

| | | | | | | | |
|---|---|---|---|---|---|---|---|
| Model | Wall-mounting, indoor/outdoor-use, RA25-56TH | | Name/ Type | RA25-56TH | | | |
| Body | Steel sheet, t1.5 | | | | | | |
| Door | Steel sheet, t1.5 | | | | | | |
| Mounting plate | Steel sheet, t2.0 | | Drawing number | – | | | 1/1 |
| Base | – | | | | | | |
| Color | Outside | Light beige (5Y7/1) (Smooth) | A3 scale | Scale | Design | Drawing | Check |
| | Inside | Light beige (5Y7/1) (Smooth) | | 1:15 | SUPAKIT | SUPAKIT | KONISHI |
| IP | IP55 | | | | | | |
| Weight | 19.8 Kg | | Date | 13/ Oct./ 2021 | | | |

© NITTO KOGYO BM

NITTO KOGYO BM