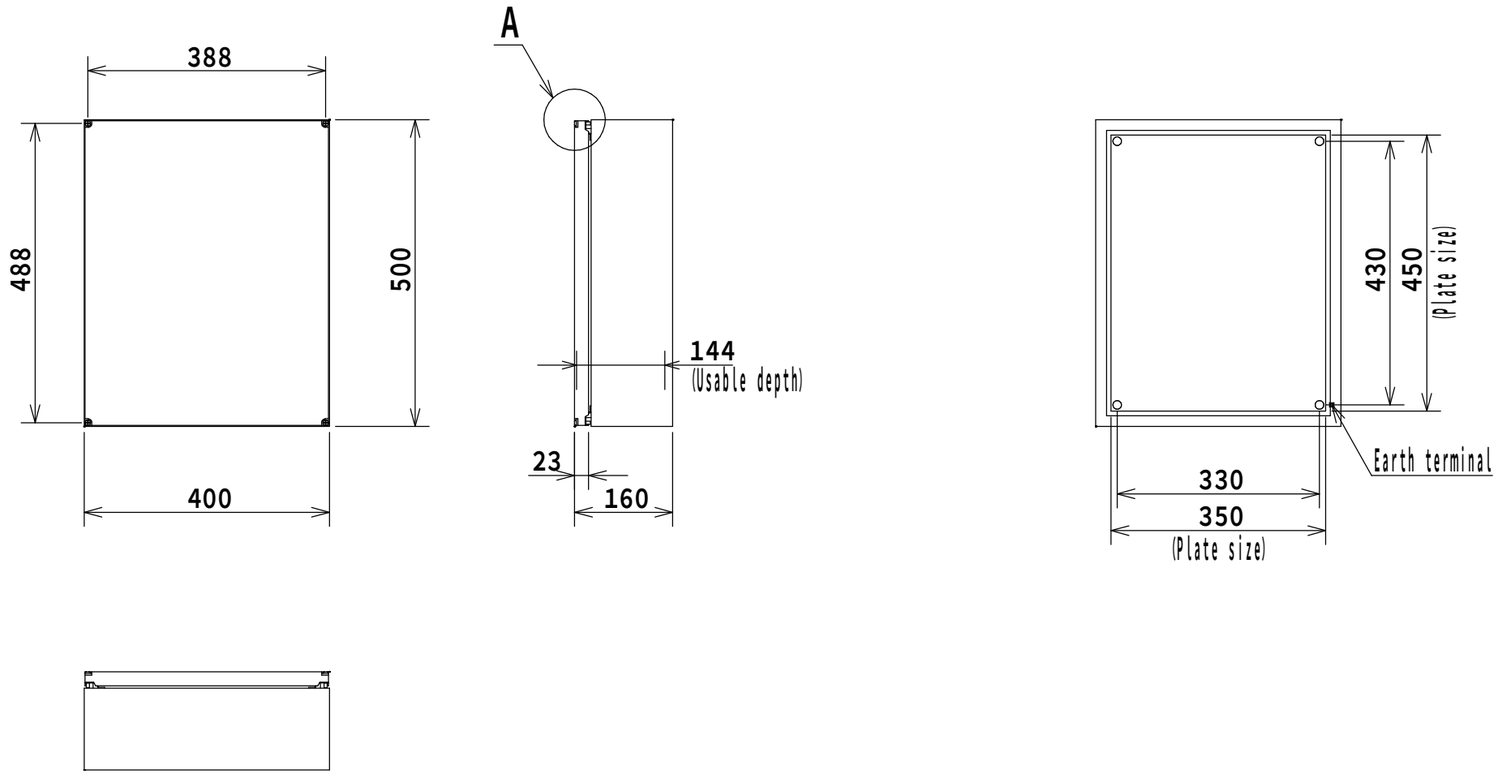

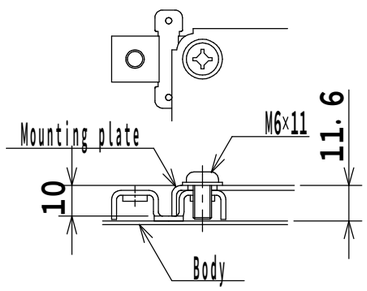

Mounting plate installation (1:2)

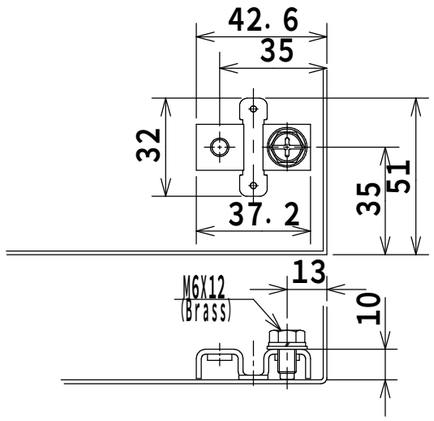

Earth terminal (1:2)

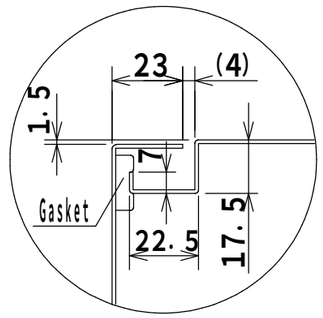

Cross section A (1:2)

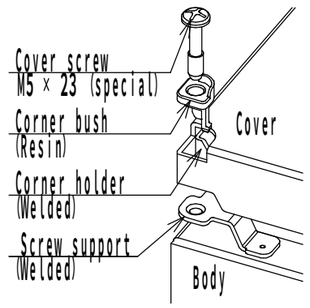

Details

Enclosure specification			
Type	Indoor / outdoor use, SCF16-45		
Body	SUS304	t1.2	
Door/Cover	SUS304	t1.2	
Mounting plate	Steel	t1.6	
Color	Mirror-Finish		
IP	IP65		
Weight	–		

Model	SCF16-45						
Drawing Number							1/1
A3 scale	Scale	1:10	Design	ITOU	Draw	SAKAMOTO	Check SUZUKI
	Date:	15 / Feb. / 2023					

© NITTO KOGYO CORPORATION

NITO 日東工業株式会社